RACK MOUNT ADAPTOR (EIA STANDARDS)

PIONEER®

JA-R105 JA-R106

ASSEMBLY GUIDE

The JA-R105 and JA-R106 rack mount adaptors are designed to meet EIA standards. If you mount the adaptors onto the Pioneer components indicated below, you will be able to install the components into a rack designed to meet EIA standards (like the Pioneer JA-R1S, JA-R2S) with a 4 unit mounting pitch.

JA-R105: Applicable for Pioneer models SA-9800, SA-8800

JA-R106: Applicable for Pioneer models SA-7800, TX-9800, TX-7800

The JA-R105 and JA-R106 are equipped with an interchangeable metal bonnet. The JA-R105 and JA-R106 are different in size but installation is the same.

SPECIFICATIONS

(JA-R105/JA-R106)

External Dimensions . . . . 480(W) x 177(H) x 400(D) mm
18-7/8(W) x 7(H) x 15-3/4(D) in.

Weight . . . . . 3.2 kg (7 lb 1 oz) without bonnet

Assembly guide 1

NOTE:
Specifications and the design subject to possible modification without notice due to improvements.

LIST OF PARTS

Front panel	1	Handgrips	2
Side panel (L)	1	Reinforcement panel	1
Side panel (R)	1	Panel braces	2
Insulating sheets	4	Metal bonnet	1
Black mounting screws for metal bonnet (M4 x 8)	4		

FOR ASSEMBLY SCREWS

Black mounting screws (M4 x 8) 16

White screws for mounting handgrips (M3 x 8) 4

Washers 4

FOR RACK-MOUNTING SCREWS

White mounting screws (M5 x 16) 4

Angular washers 4

Washers 4

FULLY ASSEMBLED FIGURE

JA-R105

Unit: mm

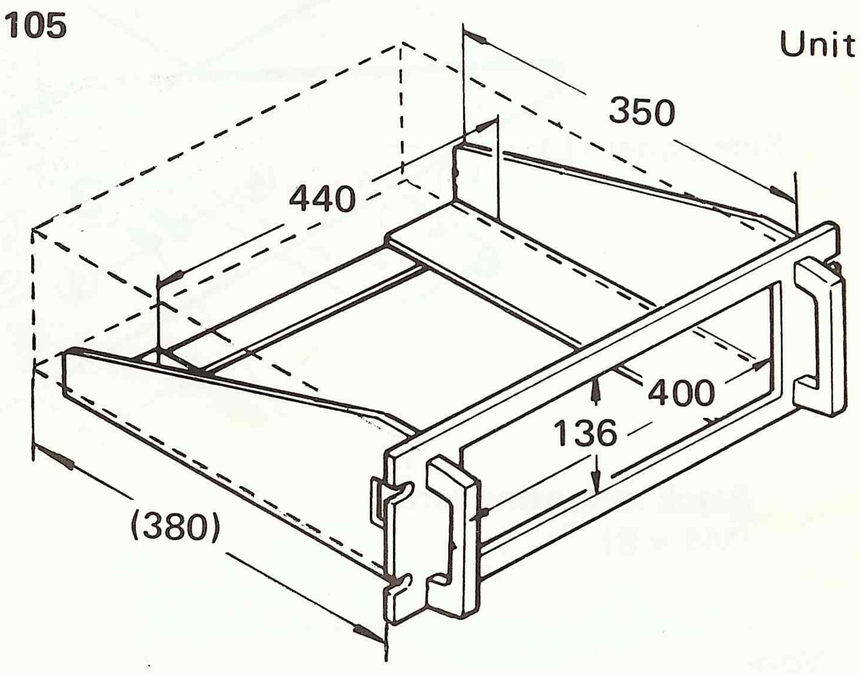

JA-R106

Unit: mm

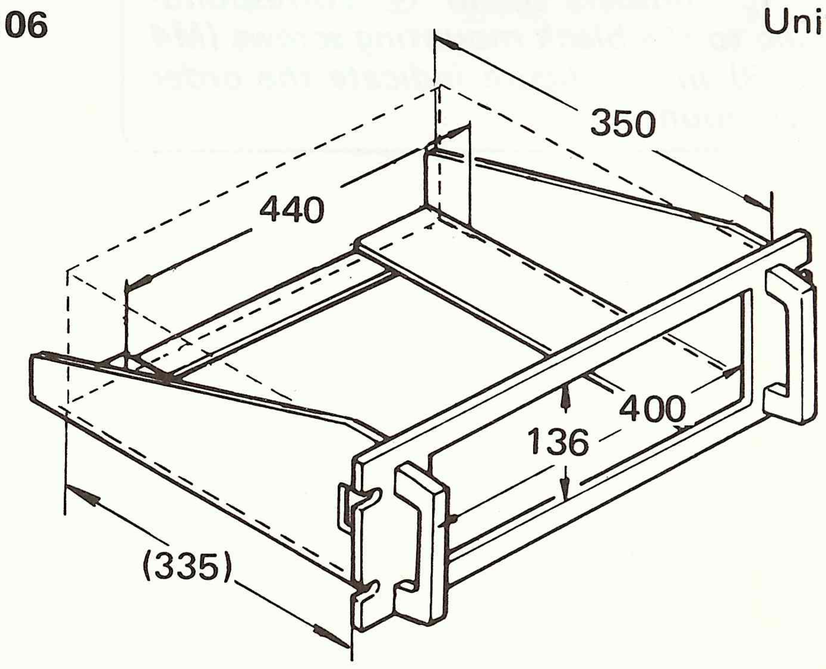

ASSEMBLY PROCEDURE

1. Check which is the front (finished) side of the front panel and insert the left and right handgrips into the front panel holes.
2. Using the four screws (M3 x 8) for mounting the handgrips and the four washers, secure the handgrips to the front panel from behind (Fig. 1).
3. Next, align the left(L) side panel with the side panels of the handgrips and, insert the four mounting screws (M4 x 8) into the mounting holes on the handgrips' side panels and secure. Then secure the right(R) side panel in the same way.
4. Finally, align the reinforcement panel and fasten securely from the top of the side panels using the four mounting screws (M4 x 8).

Screws

For assembly screws	For bonnet screws	For rack mounting screws
White screws for mounting handgrip (M3 x 8) x 4 Washer x 4	For metal bonnet	White screws (M5 x 16) x 4 Angular washers x 4 Vinyl washers x 4
Black screws for mounting handgrip and mounting the component Black mounting screws (M4 x 8) x 16	For wooden cabinet These screws are provided on wooden cabinet	

Table 1

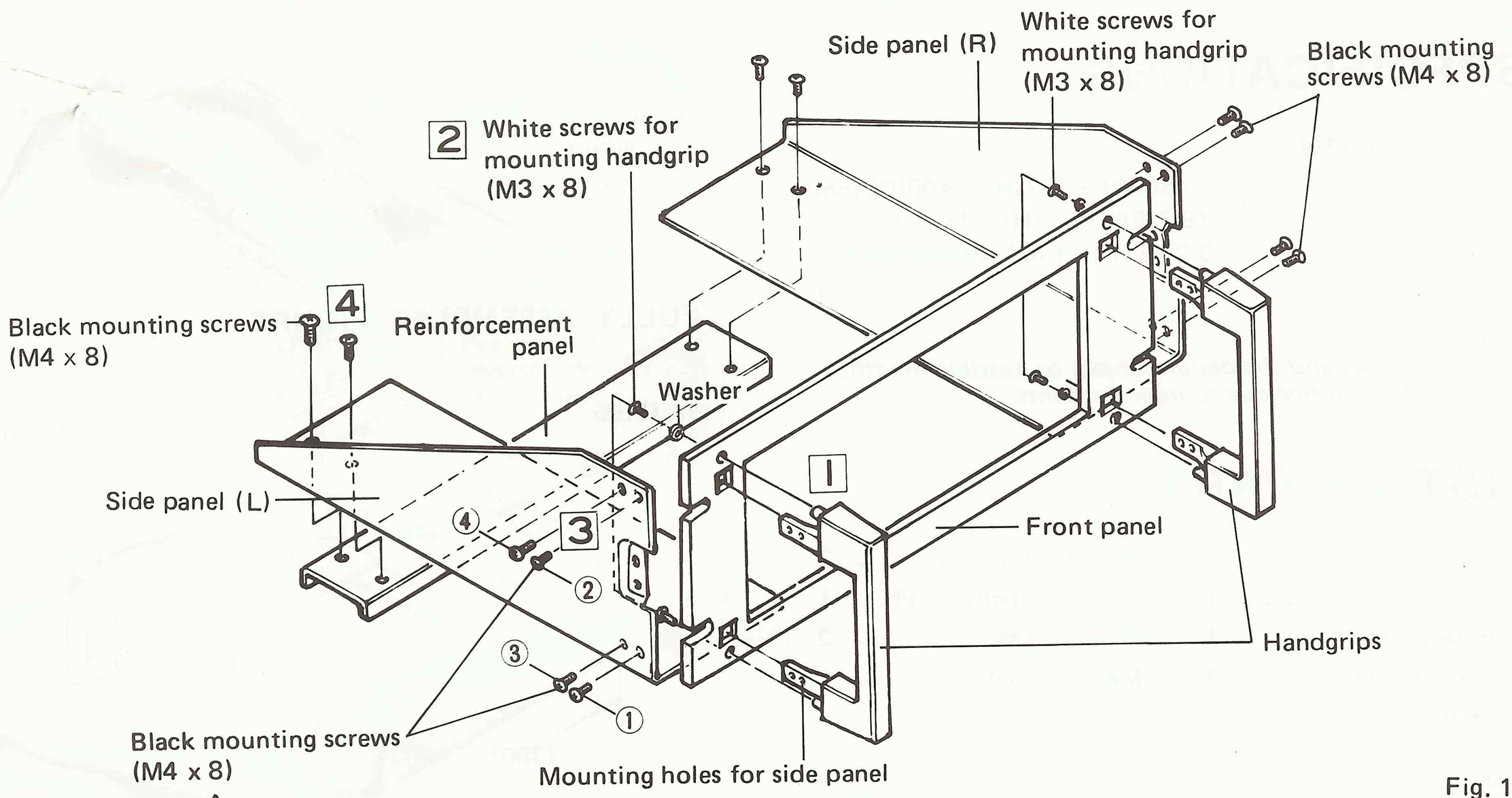

Fig. 1

Note:
The numbers ① to ④ corresponding to the black mounting screws (M4 x 8) in the figure indicate the order of mounting.

CHANGING THE BONNET

REMOVING WOODEN BONNET (Fig. 2)

1. Unscrew the four screws each on the left and right sides which secure the component's sides.
2. Remove bonnet by lifting up carefully.

MOUNTING METAL BONNET (Fig. 3)

1. Put metal bonnet over component so that bonnet's screw holes perfectly match with component's screw holes.
2. Secure metal bonnet with accessory screws (M4 x 8).

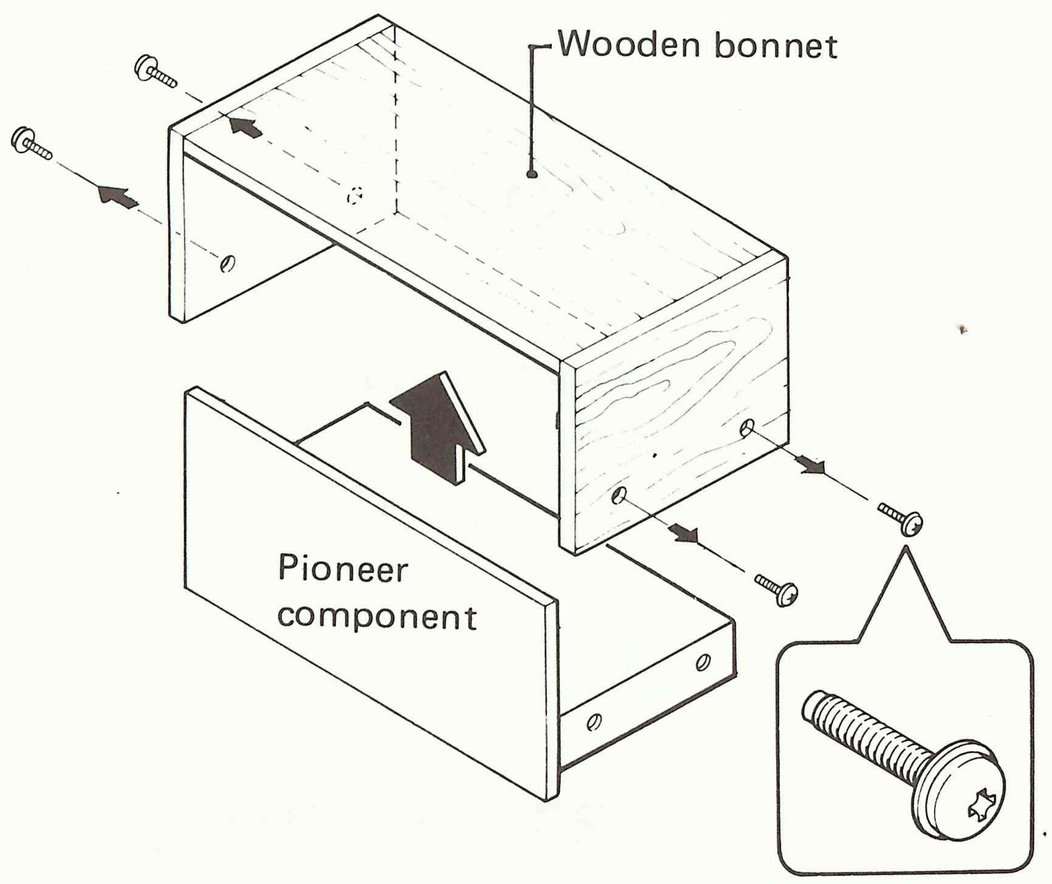

Fig. 2

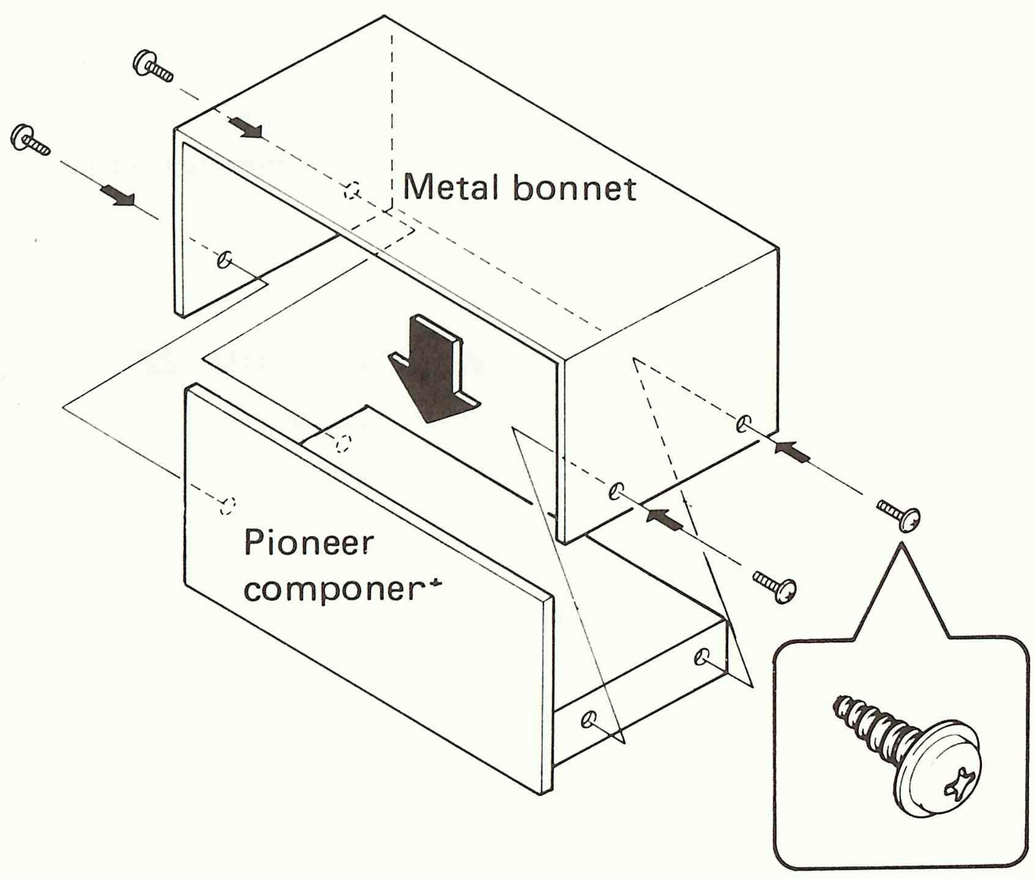

Fig. 3

MOUNTING THE COMPONENT

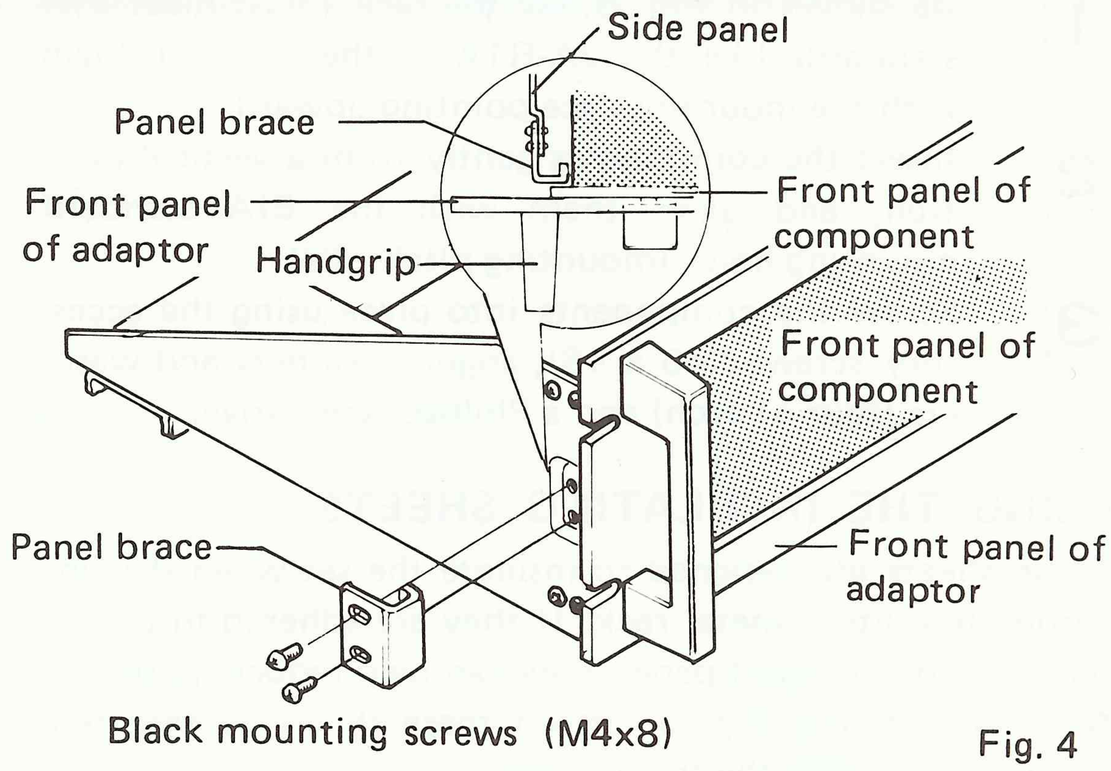

Fig. 4

1. Slide the component into the adaptor as shown in Fig. 4.
2. Make sure that the front panel of the JA-R105/JA-R106 adheres closely to the front panel of the components.
3. Tighten the panel braces with the four mounting screws (M4 x 8) and then secure the audio component from both sides.

RACK MOUNTING

1. As shown in Fig. 5, lay the rack (must meet EIA standards like the JA-R1A or the JA-R2S) down with the mounting face pointing upward.
2. Insert the components gently from a vertical position, and align them with the EIA standard mounting holes (mounting pitch: 4U).
3. Screw the components into place using the accessory screws (M5 × 16), angular washers and washers (four of each) and a Phillips screwdriver.

USING THE INSULATING SHEETS

These sheets are designed to insulate the set when it is incorporated into a metal rack. If they are adhered to the reverse side of the front panel, they can help reduce noise.
As shown in the Fig. 5, attach these sheets to the four mounting holes on the front panel.

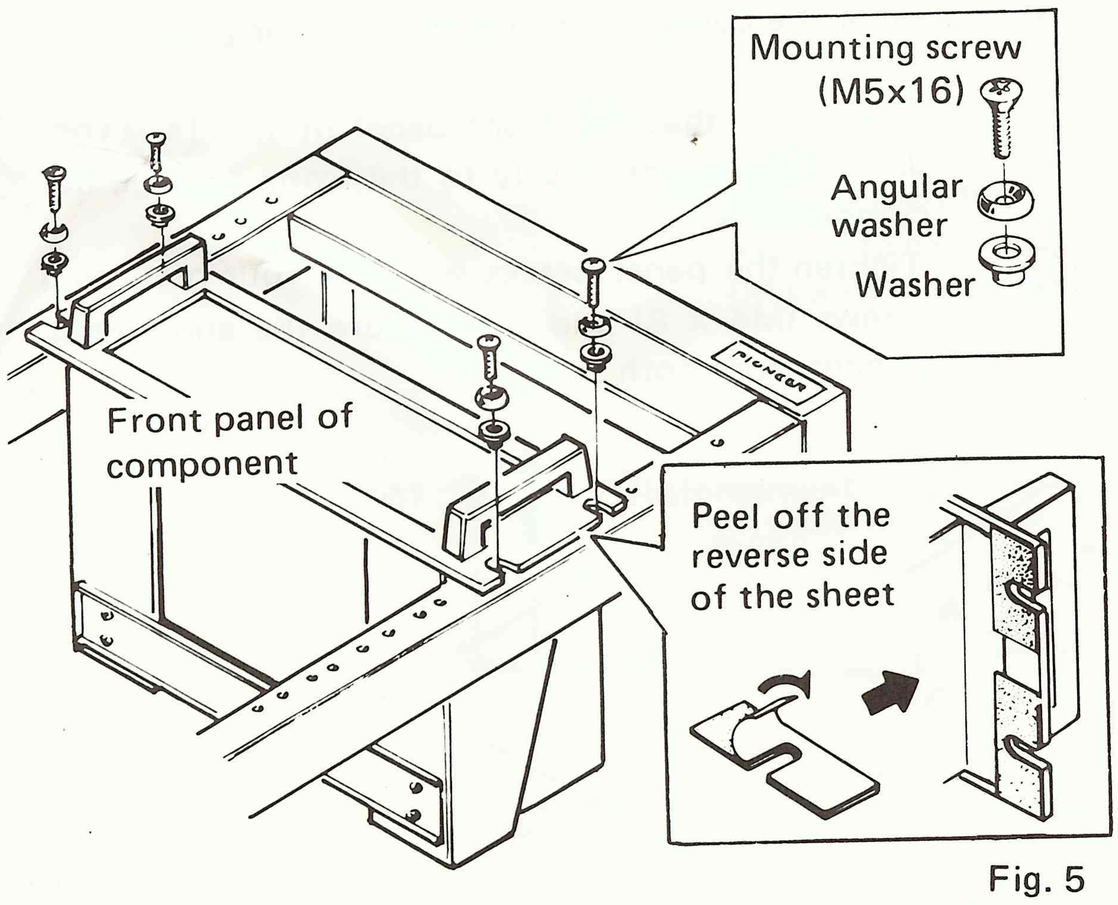

Fig. 5

PIONEER ELECTRONIC CORPORATION 4-1, Meguro 1-Chome, Meguro-ku, Tokyo 153, Japan
U.S. PIONEER ELECTRONICS CORPORATION 85 Oxford Drive, Moonachie, New Jersey 07074, U.S.A.
PIONEER ELECTRONIC (EUROPE) N.V. Luithagen-Haven 9, 2030 Antwerp, Belgium
PIONEER ELECTRONICS AUSTRALIA PTY. LTD. 178-184 Boundary Road, Braeside, Victoria 3195, Australia
Printed in Japan 〈SRB-220-0〉
〈79I00F6S02〉